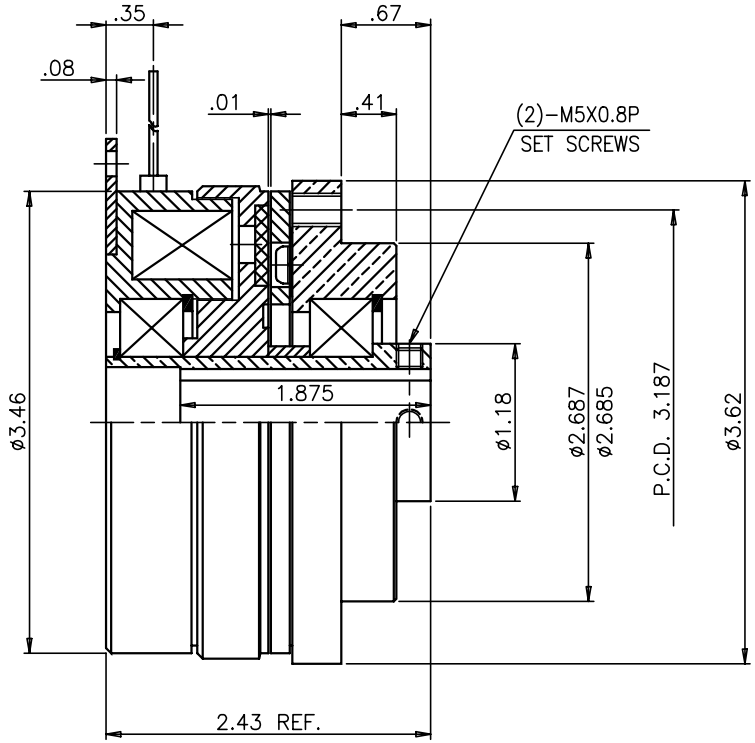

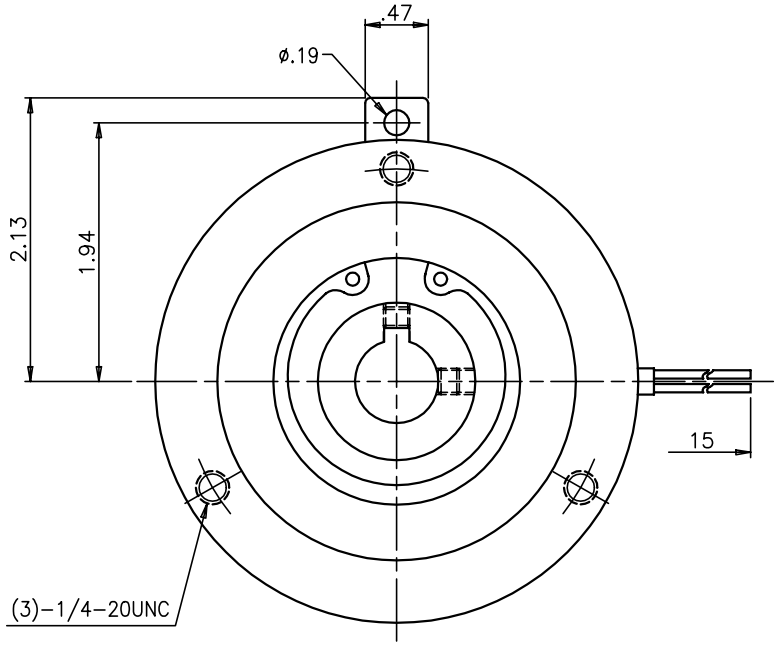

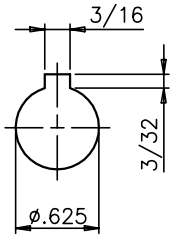

STATIC TORQUE : 15 NM
RATED VOLTAGE : D.C. 24V
POWER : 16 WATTS (20°C)

REV.	DESCRIPTION	DATE	FINISH		DRAWN		2-15-97	TITLE	MATERIAL
			NEW TORQUE, INC. 1-800-966-8325		CHECKED			SHAFT MOUNTED CLUTCH MODEL : SC-350-00	DWG NO. 1539
					SCALE 1=1	UNITS	INCH		