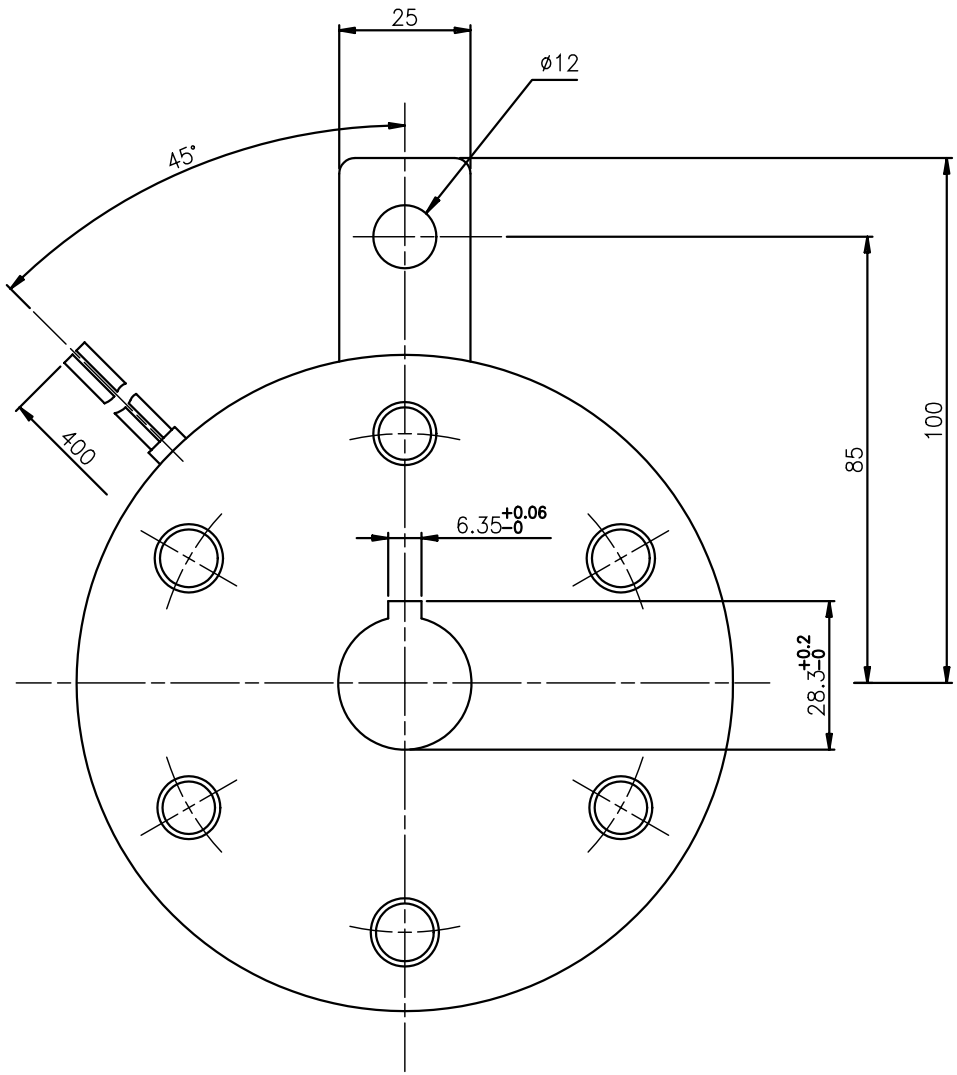

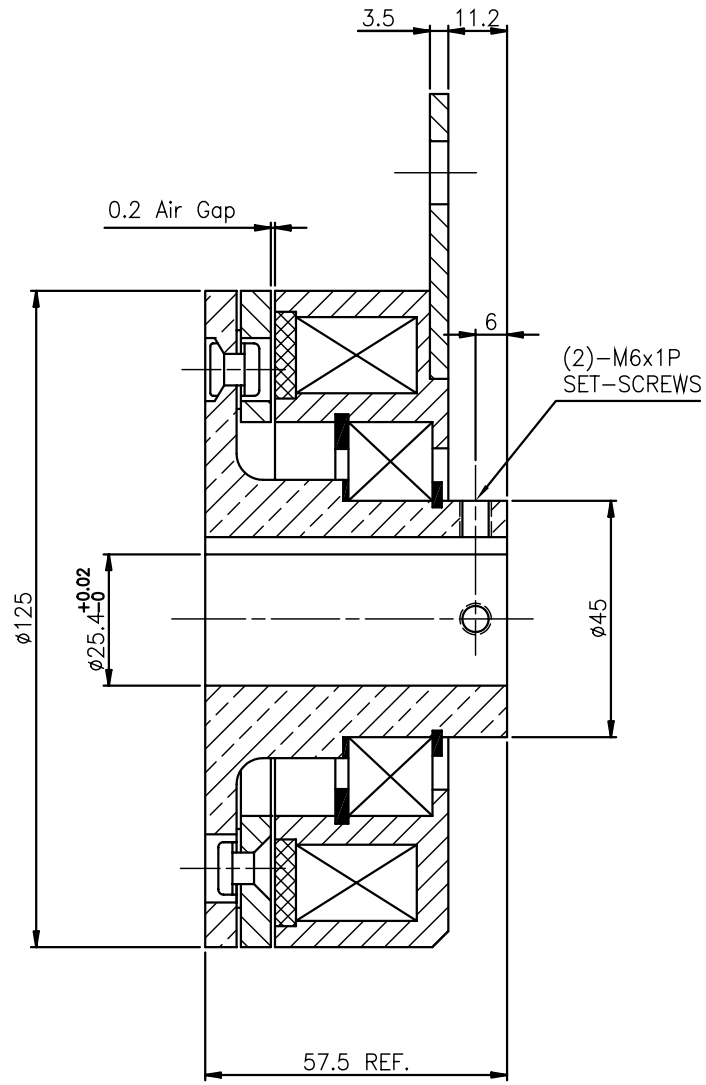

STATIC TORQUE: 60 N−m
RATED VOLTAGE: 95 VDC
RATED POWER: 30 WATTS

REV.	DESCRIPTION	DATE

FINISH

NEW TORQUE, INC.
1-800-966-8325

DRAWN			2−16−04
CHECKED			
SCALE	1=1	UNITS	MM

TITLE
SHAFT MOUNTED BRAKE
SMB−560−06

MATERIAL

DWG NO.
1555