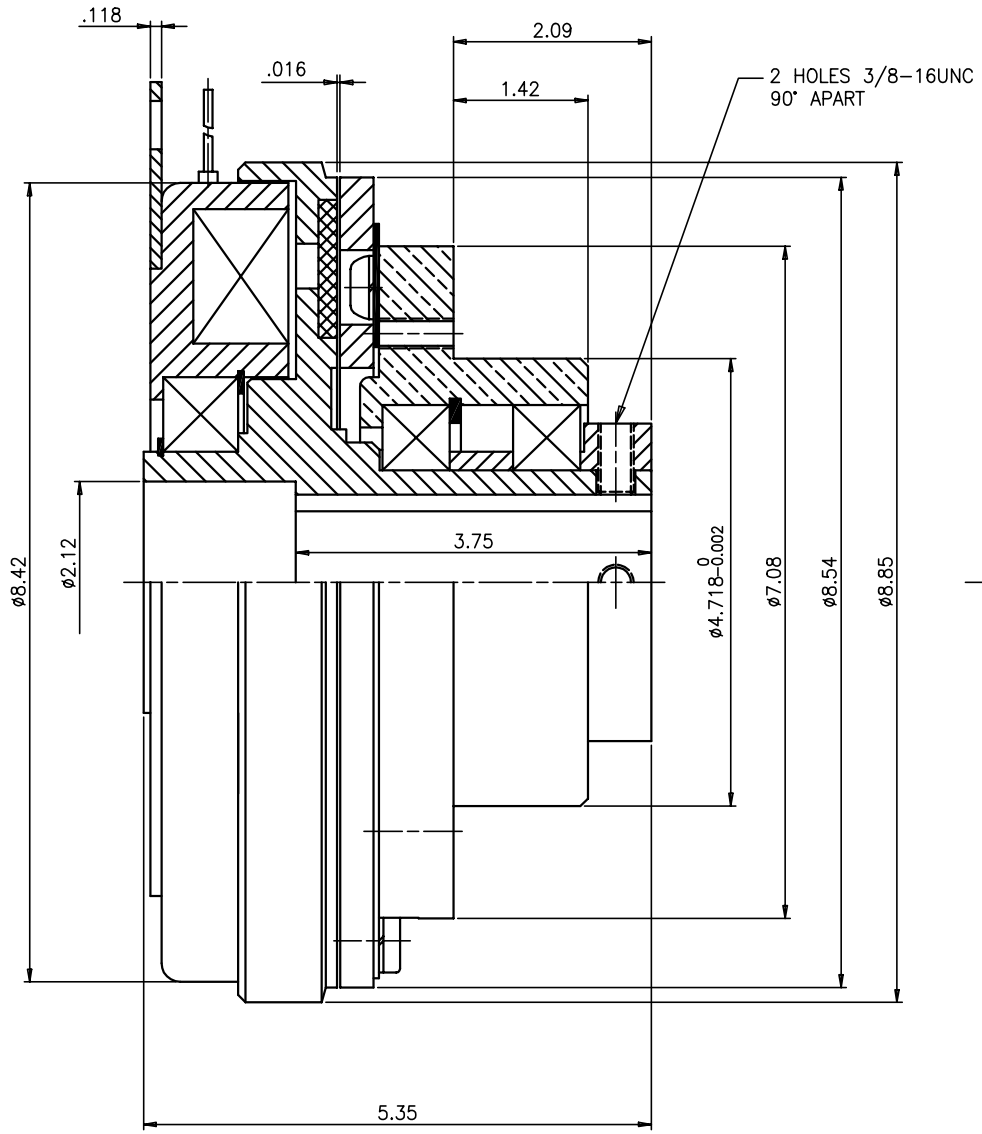

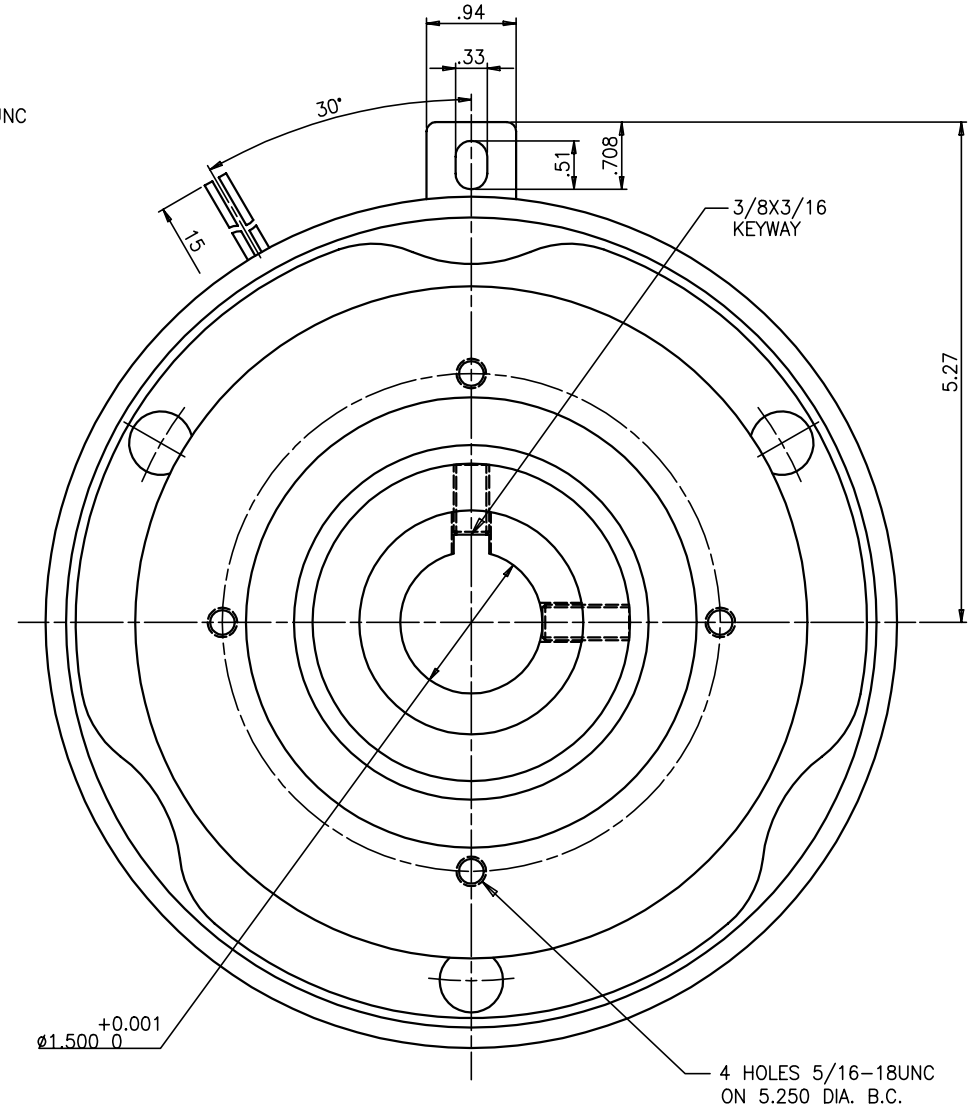

STATIC TORQUE: 1800 IN-LB
RATED VOLTAGE: D.C. 95V.
RATED POWER: 50W (20°C)

REV.	DESCRIPTION	DATE

FINISH		DRAWN	12-27-93
NEW TORQUE, INC. 1-800-966-8325		CHECKED	
		SCALE —	UNITS INCH

TITLE
SHAFT MOUNTED CLUTCH
MODEL: SC-880

MATERIAL

DWG NO. 1592