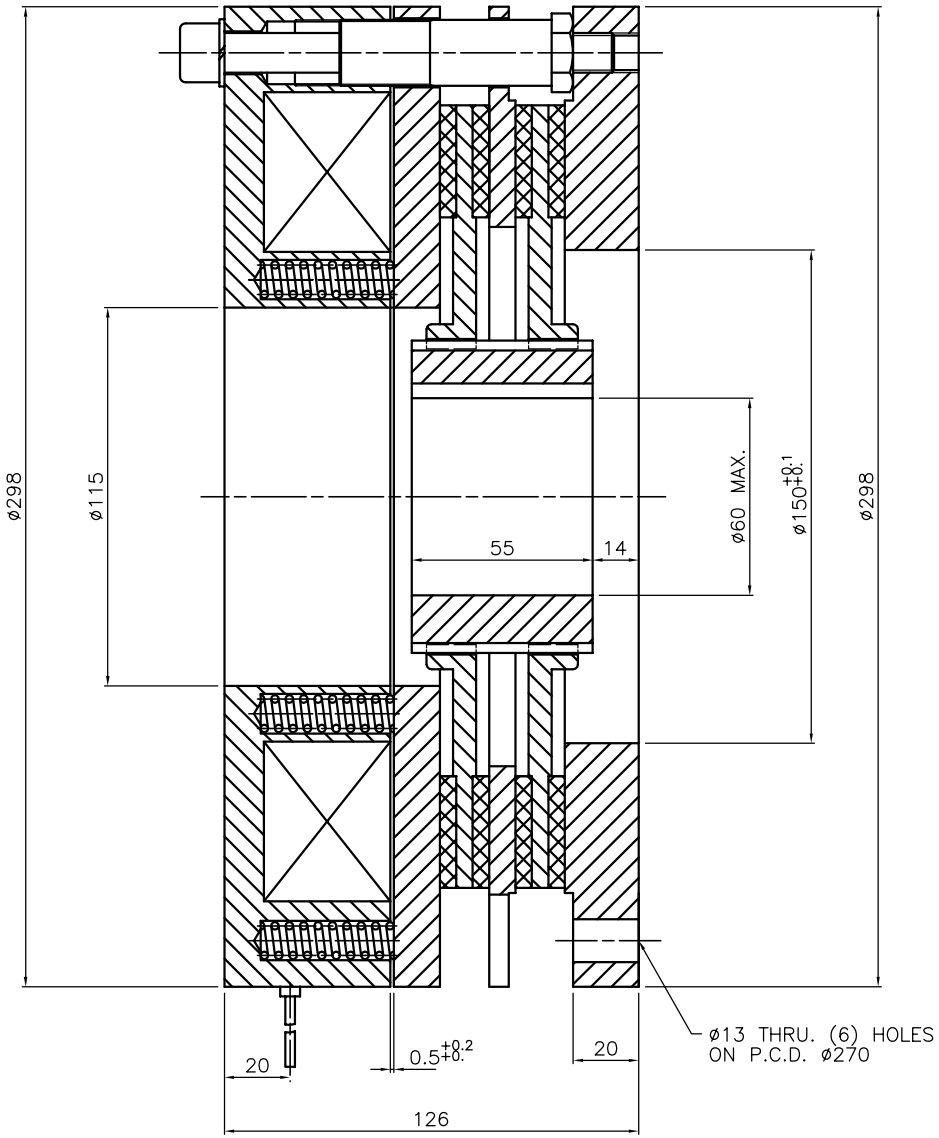

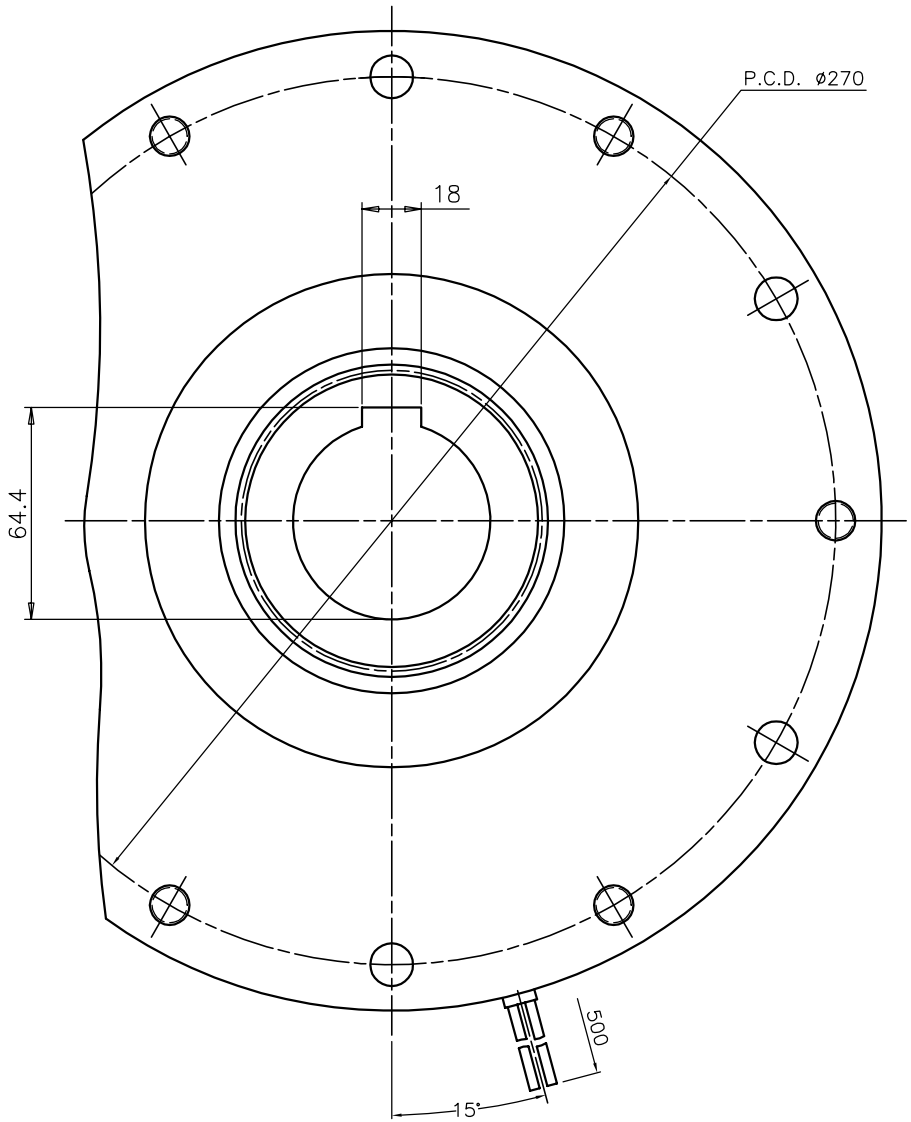

STATIC TORQUE: 75 kg–m
RATED VOLTAGE: DC 95V.
POWER: 170 WATTS

			FINISH		DRAWN		12–10–94	TITLE	MATERIAL
			NEW TORQUE, INC.		CHECKED			SPRING–SET BRAKE SB–75–2D	DWG NO. 1594
REV.	DESCRIPTION	DATE			SCALE	———	UNITS MM		