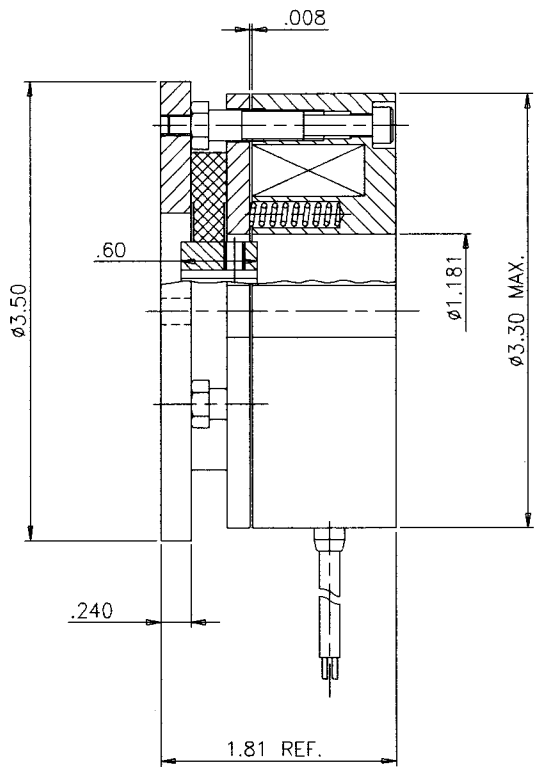

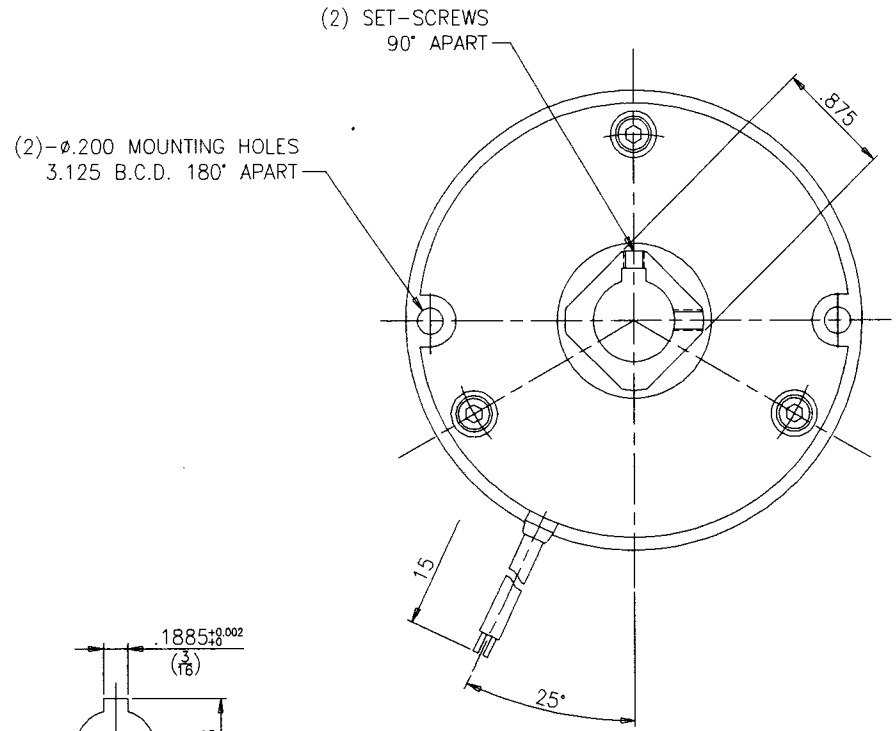

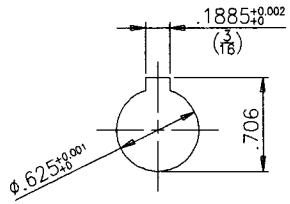

HUB BORE AND KEYWAY

STATIC TORQUE: 35 LB-IN
RATED VOLTAGE: 24VDC
RATED POWER: 20 WATTS(@20°C)

REV.	DESCRIPTION	DATE		FINISH		DRAWN		5-15-02	TITLE	MATERIAL
			NEW TORQUE, INC. 800-966-8325			CHECKED			SPRING APPLIED BRAKE TYPE: SAB-0.4-24	DWG NO. 1554
						SCALE	1=1	UNITS INCH		